EN-508W MANUAL

Model: A1

2017-06

CONTENTS

1. FUNCTION OVERVIEW **1**
2. TECHNICAL PARAMETERS **1**
3. CONNECTION MODE **2**
3.1 PORT INTRODUCTION 2
3.2 CONNECTION DIAGRAM OF CONTROLLER 2
3.3 METHOD OF CONNECTING WITH LIGHTING FIXTURES 3
4. BASIC OPERATION **4**
4.1 BUTTONS INTRODUCTIION 4
4.2 DISPLAY AND PARAMETERS MODIFICATION 4
4.21 STARTING UP DISPLAY *4*
4.22 ID SETTING *5*
4.23 LANGUAGE SETTING *5*
4.24 RESTORE FACTORY SETTING *6*
4.25 ERROR CODE *6*
5. LIGHTING FIXTURE ADDRESSING **7**
5.1 ADDRESSING 7
5.2 ADDRESS SETTING 9
5.2.1 UCS512A/UCS512B *9*
5.2.2 DMX512AP/SM512 ..... *10*
5.2.3 SW-U *10*
5.2.4 UCS512C0 ..... *11*
5.2.5 UCS512C4 ..... *12*
5.2.6 SM16512 ..... *13*
5.2.7 SW-D *13*
5.3 UNSUCCESSFUL ADDRESSING 14
5.3.1 UCS512A/UCS512B *14*
5.3.2 DMX512AP/SM512 ..... *14*
5.3.3 SW-U *14*
5.3.4 UCS512C *15*
5.3.5 UCS512C4 ..... *15*
5.3.6 SM16512 ..... *15*
5.3.7 SW-D *15*
6. IP ADDRESS SETTING (PC) **16**
7. SETTING THE NIC OF RGBPLAYER **17**
8. CONTROLLER REUSE **18**
9. UNLOCK PROJECT **19**

1. FUNCTION OVERVIEW

1. Unique data processing method for the display with complex shape, it's easy to make a solution.
2. PC online used, controllers can be multi-connected. It support 400,000 pixels(include the useless pixels) in 154 controllers.
3. 8-channel output signal (data-independent), applicable for small, medium and large engineering projects and remote transmission.
4. Intelligent ID set by controller which is stable and reliable.
5. Same content can be shown in more than one screen.
6. Control the LED digital tube screen and LED pixel light screen those with variety of regular chips.
   Single chip lighting fixture: D**S series, D**J series.
   Single-wire lighting fixture: TM18** series, UCS19** series, WS2811.
   DMX512 lighting fixture: SW standard DMX512 lighting fixture, UCS DMX512 lighting fixture, SM DMX512 lighting fixture, standard DMX512 lighting fixture on the market.
7. Specialized software of making animation is included, users can make their own effects.
8. Encryption is optional with the customized controller.

2. TECHNICAL PARAMETERS

Size:	329L×199W×43.6H (mm)
Input voltage:	AC100V - 240V
Input signal:	SW Ethernet Protocol
Output port:	TTL & RS-485 * 8 channels
Pixel quantity drove:	Single chip lighting fixture: 960 points ×8 channels, Single-wire lighting: 1024 points ×8 channels, standard DMX512light: 168 points ×8 channels, extensible DMX light: 336 points ×8 channels,
Output power:	5W
Working temperature:	-15℃ ~ 60℃
Relative humidity:	≤50%
Connecting mode:	in parallel (should address for each controller)
Transmission distance:	Use UTP—unshielded twisted pair cable, distance between the controllers can be 100m. It can be 5km if use the optical fiber if the distance.
IP grade:	IP0 (not dustproof and not waterproof)
Working environment:	Please install under dry indoor condition, avoid any dust, moist and rain.
Weight:	2400g (N.W. 1900g)
Accessories attached:	×1、 ×5

3. CONNECTION MODE

3.1 PORT INTRODUCTION

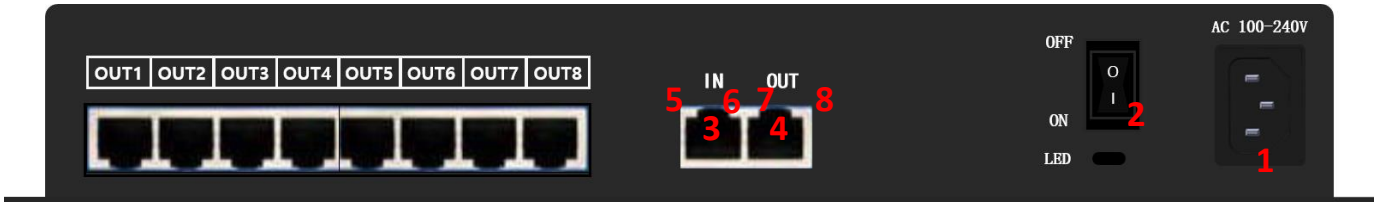

	Port/Indicator light	Function description
1	Power input port	Connect with power adapter (AV100-240V)
2	Switch	Switch of power supply
3	Cascade signal input port	Insert network cable, signal output, connect with previous controller as a series
4	Cascade signal output port	Insert network cable, signal output, connect with next controller as a series or no need.
5	IN top left yellow light	Connect with indicator light
6	IN top right green light	Input signal indicator (flicker when input signal occurs)
7	OUT top left yellow light	Connect with indicator light
8	OUT top right green light	Input signal indicator (flicker when input signal occurs)

3.2 CONNECTION DIAGRAM OF CONTROLLER

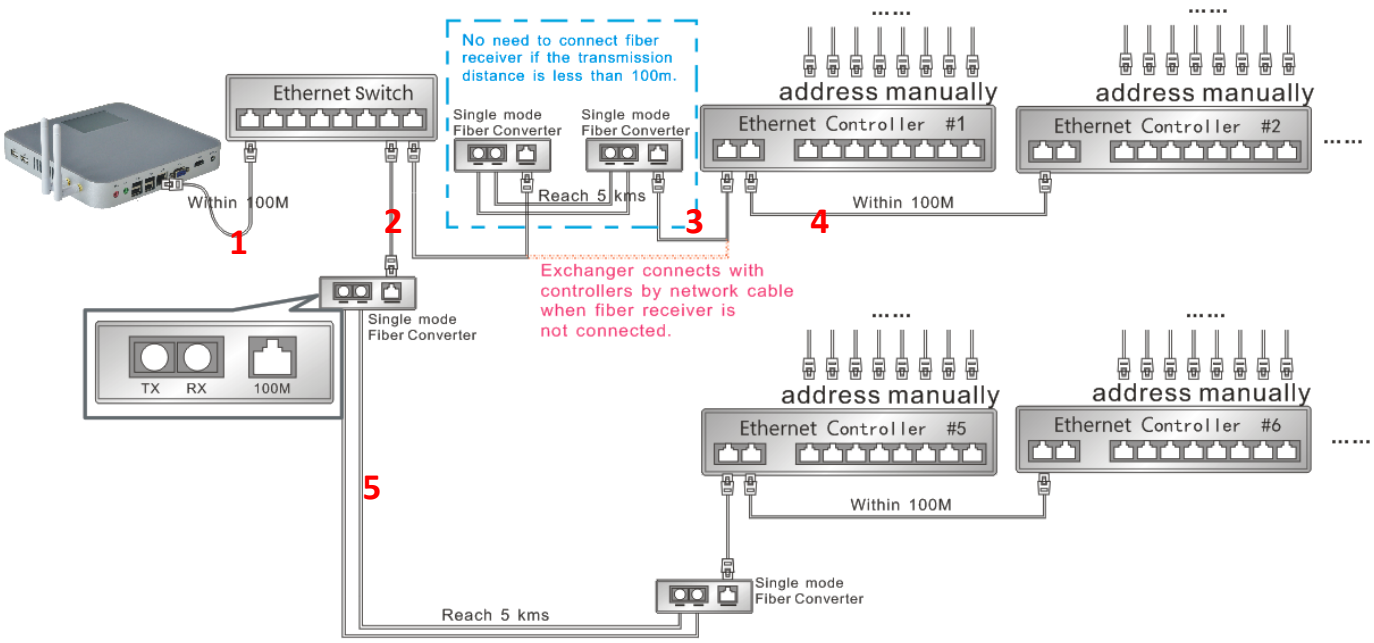

N0.	Material	Standard	Connection Port	Transmission Distance	Connecting Device
1	Network cable	Straight cable	RJ45 network cable plug (crystal head) (T568B line sequence)	Within 100m	PC and ethernet switch
2					Ethernet switch and optical fiber converter/Ethernet controller
3					Optical fiber converter and controller
4					Controller and controller
5	Optical fiber	Fiber converter (one pair)	Optical fiber patch cable (LC-SC single mode)	Within 5km	Optical fiber converter and optical

3.3 METHOD OF CONNECTING WITH LIGHTING FIXTURES

The circuit should be adjusted in different applications. It is well set in accordance with actual project before delivery. User cannot change the application optionally. Please connect the cables in accordance with silk print on lighting fixture.

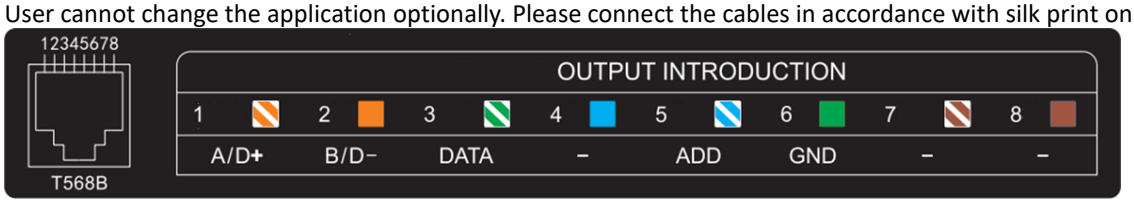

TTL signal output connection:

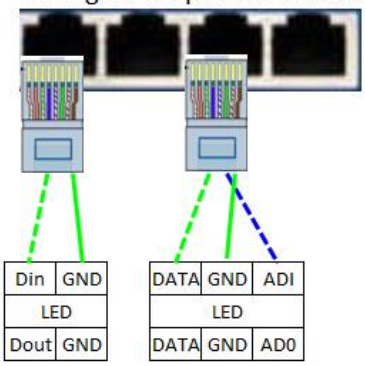

485 signal output connection:

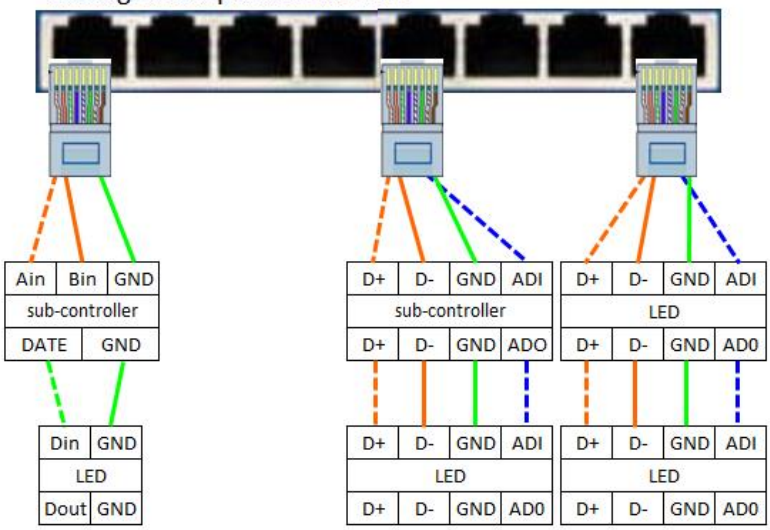

★ Signal cables connection notes:

1. Use UTP—Unshielded Twisted Pair(resistance per 100M<10Ω), low quality Ethernet cables and telephone cable are unavailable.
2. Use one group twisted pair, suggest green + green white or orange + orange white. The quality and color of the cable are very important. Blue and brown wires greatly influence the signal transmission. Please don't use several groups of twisted pairs together.
3. Controller signal output GND must connect directly with input GND of lighting fixture. ***Cannot connect with lighting fixture through power switch***.
4. Switch on the controller after all hardware signal cables and wires are connected. Please *don't CONNECT / DISCONNECT* the signal cables while the controller is power on; avoid bad output by reverse current and protect the circuit and components.

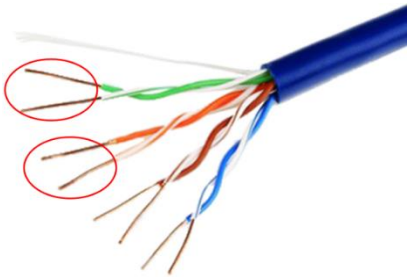

★ Transmission distance:

transmission type	Transmission Signals	transmission media	transmission distance	Notes
Master control-> slave control	RS-485	UTP-Unshielded Twisted pair	50 ~ 100	
Master control/slave control->SW Lighting Fixtures	TTL	UTP-Unshielded Twisted pair	30 ~ 50	
		two core copper wire	5 ~ 30	
Master control/slave control->Other Lighting Fixtures	TTL	UTP-Unshielded Twisted pair	5 ~ 20	
		two core wire	1 ~ 5	
Master control/slave control->DMX Lighting Fixtures	RS-485	UTP-Unshielded Twisted pair	30 ~ 50	The addr wire must be within 5 meter.
		three core wire	1 ~ 20	
		four core wire	1 ~ 20	
SW Lighting Fixtures->SW Lighting Fixtures DMX Lighting Fixtures->DMXLighting Fixtures	TTL	UTP-Unshielded Twisted pair	5 ~ 20	meters controlled less if over 5 meter
		two core wire	1 ~ 5	
		three core wire	1 ~ 5	
Other Lighting Fixtures->Other Lighting Fixtures	TTL	UTP-Unshielded Twisted pair	1 ~ 2	meters controlled less if over 1 meter
		two core wire	0.1 ~ 1	

4. BASIC OPERATION

4.1 BUTTONS INTRODUCTIION

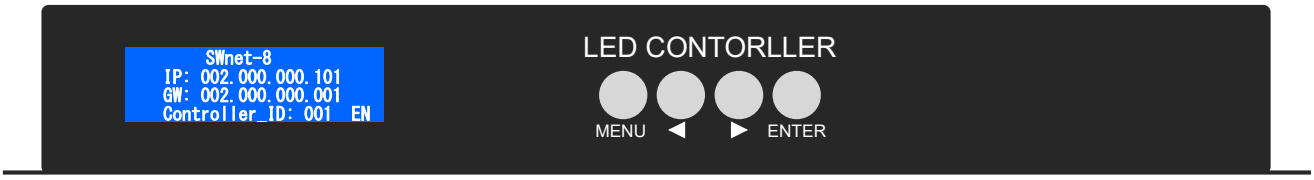

Funcion	Button	Descreption	
/	MENU	menu	Function switchover: ID setting, Language setting, Restroe factory default.
ID Setting	MENU	menu	Function switchover.
	◀	descending	Decrease value.
	▶	ascending	Increase value.
	ENTER	enter/confirm	Enter the setting/confirm and save after modification.
Language Setting	MENU	menu	Function switchover.
	◀	shift to the left	Move the cursor to the left.
	▶	shift to the right	Move the cursor to the right.
	ENTER	enter/confirm	Enter the setting/confirm and save after modification.
Addressing Mode	※ This controller does not support this function.		
Restore Factory Setting	MENU	menu	Function switchover.
	◀	shift to the left	Move the cursor to the left.
	▶	shift to the right	Move the cursor to the right.
	ENTER	enter/confirm	Enter the setting/confirm and save after modification.

4.2 DISPLAY AND PARAMETERS MODIFICATION

4.21 STARTING UP DISPLAY

1. PC connects with controller by network cable, switch on the power. Controller screen will display “Network INIT...”. After few seconds, it becomes “Network INIT OK” and jump to the page of IP address information. In this case, the network of the controller is accessible.

2. When the network of the controller is unavailable, the controller will show “Network INIT Fail Check the cable?” after the power switches on for a while. In this case, press “MENU” button to enter different options and conduct the setting.

4.22 ID SETTING

1. Press “MENU” button and select *ID Setting*, press “ENTER” button to enter it and set the ID.

2. Press“►” and “◄” button to decrease/increase the value.

Note: Please don't open the LED player when you are setting ID, and reboot the controller to confirm the address after the setting is complete. The ID of first controller in each port of exchanger is 1. It should be set into different ID manually. In the meantime, if the first one set to be 1, the second set to be 2, the third set to be 3, and so on.

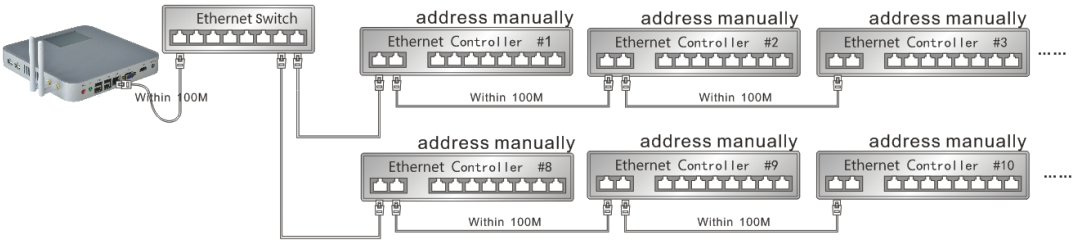

And the IP address of PC must be 98 like below.

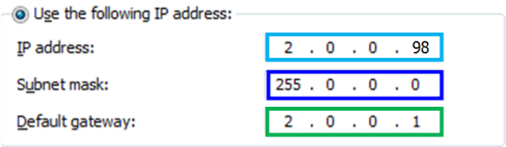

3. Long press “ENTER” button to save ID if it is confirmed. No flicker indicates the parameters are modified successfully.

➡ If the data has been modified, the controller must be restarted to validate the new data.
(It is available to restart the controller after all the parameters modification finished.)

4.23 LANGUAGE SETTING

1. Press “MENU” button and select *Language Setting*; press “ENTER” button to enter it. Set the display language of the controller.

2. Flickering digit is the one can be modified (cursor location). Press “◄” and “►” buttons to move the cursor to the left and right.

3. Press “ENTER” button to confirm the language selected, then it returns to the page of parameters.
The language selected can be seen on the bottom right corner: CH is Chinese and EN is English.

4.24 RESTORE FACTORY SETTING

1. Press “MENU” button and select *Restore Factory Setting*; press “ENTER” button to enter it.

2. Flickering digit is the one can be modified (cursor location). Press “◄” and “►” buttons to move the cursor to the left and right.

3. Press “ENTER” button to save modification if it is confirmed, then it returns to the page of parameters and all parameters become factory defaults.

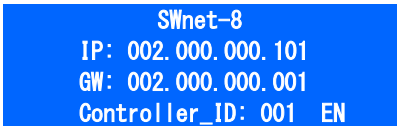

➡ If the data has been modified, the controller must be restarted to validate the new data.
(It is available to restart the controller after all the parameters modification finished.)

4.25 ERROR CODE

Program	The Screen Shows	Reason
The program function is error.	ER 08	If the unique in the program is different with the motherboard’s, the controller shows ER08.
The UID is error.	ER 09	The controller shows ER09 when the UID of RGBPlayer is different with the controllers’. And the controller stop output control the lighting fixtures.
The checksum for encryption is incorrect.	ER 10	The controller shows ER10 when it received the incorrect checksum for encryption.
The UID of RGBPlayer is different with the controllers’.	ER 11	The controller shows ER11 when follow two case. 1. The regular RGBPlayer control the encrypted controller. 2. The encrypted RGBPlayer control the regular RGBPlayer.

5. LIGHTING FIXTURE ADDRESSING

5.1 ADDRESSING

It can intelligent address the DMX lighting fixtures

ENTER-IN ADDRESSING	Click “Addressint” of “Tools” in RGBPlayer, select “Advanced Addressing”.	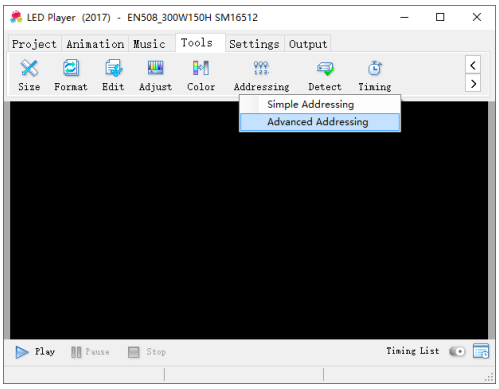
THEHARDWARE INFORMATION	**Controller:** It shows the number of controllers in the project automatically. [Online] is that the controllers connection work. [Offline] is that the controllers connection close. It cannot address the lighting fixture. If the controller output control another lighting fixtures except DMX series, it shows taboo. It can be modified in SETUP. **Chip**: It shows the number/address of ships.	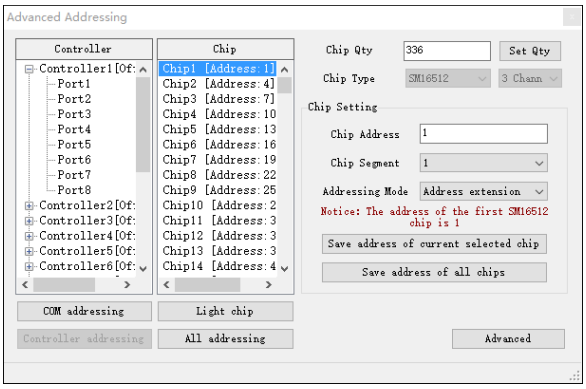
SETUP THE CHIPS’ADDRESSING	**Chip Qty**: It reads the settingup while first be used. It can be set manually and click Set Qty to save. **Chip Type**: It reads the settingup while first be used. It can be modified in SETUP. **Chip Adress**: It can be set the adress of the select chip,and click Save. **Chip Segment**: It can be set the pixel of the select chip,and click Save. **Addressing Mode**: None, Address extension, Use the same address. None It only saves the address of the selected chip. And the anothers will not changed. Address Extension It only saves the address of the selected chip. And the anothers will be extended. Use The Same Address It saves the same addreess of all chips. **Save Address of Current Selected Chip**: Click and save the address of the selected chip. **Save Address of All Chips**: Click and save all chips. The each chips’ address will change by the address setting and the segment setting.	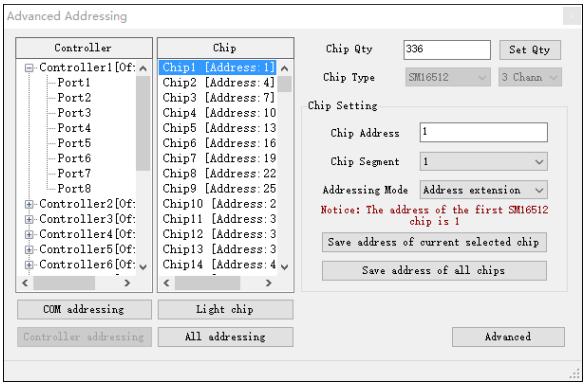

SETTUP THE CHIPS DATA	**Advanced**: If the controller output control UCS512C4 orSM16512, It will be set up the Power-on brightness.	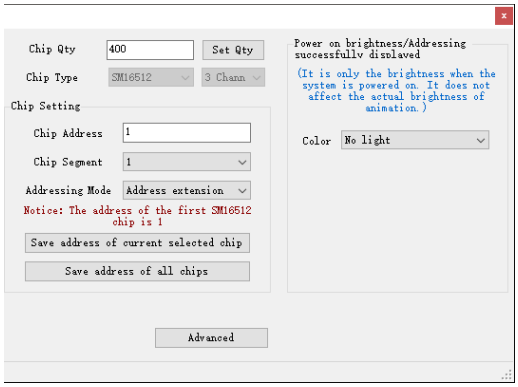
ADDRESSING	**Com Addressing**: It will be used by the selected port. Click it and the lighting fixtrures in the selected port will be addressed. **Controller Adressing**: It will be used by the selected controller. Click it and the lighting fixtrures in the selected controller will be addressed. **All Addressing**: Click it and the all lighting fixtrures will be addressed. (The offline controller cannot address.) **Light Chip**: Click it and light up the selected chip. Please make sure the address of chips in RGBPlayer are same with the lighting fixtures'.	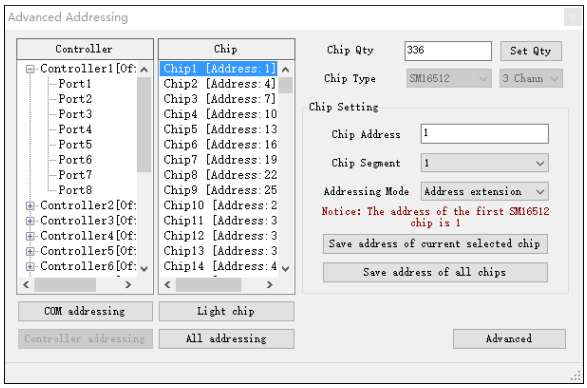
	RGBPlayer shows the progress bar in the lower right corner. It shows "Addressing completed!" when all the EN-508 controller recive the addressing data. It is not the lighting fixtures addressing correct. The addressing successful is according to the light corlor. UCS512C4 and SM16512 shows the power-on light corlor after the addressing successful light corlor.	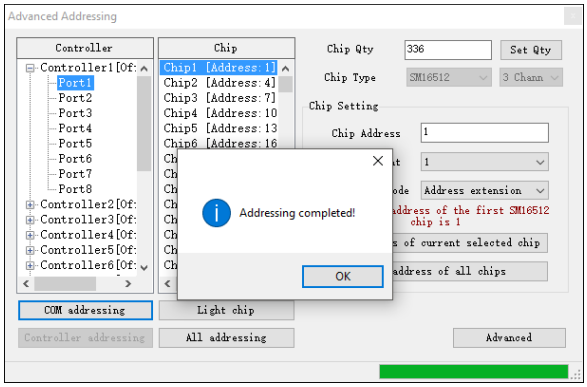

5.2 ADDRESS SETTING

5.2.1 UCS512A/UCS512B

※ "ADDRESS PLUS ****" means entering "auto addressing" mode, e.g. #1, #2, #3……#999.
"ADDRESS PLUS 0000" means entering "fixed addressing" mode, e.g. #6, #6, #6……#6.

Number of channels in single chip: number of lighting fixture ÷ number of DMX chips × Number of Channels.
The first address of Nth lighting fixture is X * (N-1) where X is the number of channels in each lighting fixture.

Color of LED	Number of Channels	Number of Lighting fixtures	Number of DMX chips in each lighting fixture Pixels	Number of channels in single chip	First Add. Of Each Chip					Type of control signal	Color display when addressing successfully
					Chip 1	Chip 2	Chip 3	Chip 4	Chip 5		
UCS512	3	1	1	3	0	3	6	9	12	485 differential signal	Blue
		8	1	24	0	24	48	72	96		
			8	3	0	24	48	72	96		
		12	1	36	0	36	72	108	144		
			12	3	0	36	72	108	144		
		16	1	48	0	48	96	144	192		
			16	3	0	48	96	144	192		
UCS512 UCS512A UCS512A2	4	1	1	4	0	4	8	12	16		
		8	1	32	0	32	64	96	128		
			8	4	0	32	64	96	128		
		12	1	48	0	48	96	144	192		
			12	4	0	48	96	144	192		
		16	1	64	0	64	128	192	256		
			16	4	0	64	128	192	256		
UCS512B UCS512B3	3	1	1	3	0	3	6	9	12	TTL single-wire signal	
		8	1	24	0	24	48	72	96		
			8	3	0	24	48	72	96		
		12	1	36	0	36	72	108	144		
			12	3	0	36	72	108	144		
		16	1	48	0	48	96	144	192		
			16	3	0	48	96	144	192		
UCS512B4	1	1	1	1	0	1	2	3	4		
	3	1	1	3	0	3	6	9	12		
		8	1	24	0	24	48	72	96		
			8	3	0	24	48	72	96		
		12	1	36	0	36	72	108	144		
			12	3	0	36	72	108	144		
		16	1	48	0	48	96	144	192		
			16	3	0	48	96	144	192		
	4	1	1	4	0	4	8	12	16		
		8	1	32	0	32	64	96	128		
			8	4	0	32	64	96	128		
		12	1	48	0	48	96	144	192		
			12	4	0	48	96	144	192		
		16	1	64	0	64	128	192	256		
			16	4	0	64	128	192	256		

5.2.2 DMX512AP/SM512

※ "A* **" means entering "auto addressing" mode, e.g. #1, #2, #3……#999.
"A0 00" means entering "fixed addressing" mode, e.g. #6, #6, #6……#6.

Number of channels in single chip: number of lighting fixture pixel ÷ number of DMX chips × Number of Channels.
The first address of Nth lighting fixture is X*(N-1)+1 where X is the number of channels in each lighting fixture.

Color of LED	Number of Channels	Number of Lighting fixture Pixels	Number of DMX chips in each lighting fixture	Number of channels in single chip	First Add. Of Each Chip					Type of control signal	Color display when addressing successfully
					Chip 1	Chip 2	Chip 3	Chip 4	Chip 5		
DMX512AP-N	3	1	1	3	1	4	7	10	13	TTL single-wire signal	White
DMX512AP-NE	3	1	1	3	1	4	7	10	13		Green
SM512-4	4	1	1	4	1	5	9	13	17		
SM512-9	9	1	1	9	1	10	19	28	37		
SM512-12	12	1	1	12	1	13	25	37	49		

5.2.3 SW-U

※ "A* **" means entering "auto addressing" mode, e.g. #1, #2, #3……#999.
"A0 00" means entering "fixed addressing" mode, e.g. #6, #6, #6……#6.

Number of channels in single chip: number of lamp pixel ÷ number of DMX chips × Number of Channels.
The first address of Nth lighting fixture is X*(N-1) where X is the number of channels in each lighting fixture.

Color of LED	Number of Channels	Number of Lighting fixture Pixels	Number of DMX chips in each lighting fixture	Number of channels in single chip	First Add. Of Each Chip					Type of control signal	Color display when addressing successfully
					Chip 1	Chip 2	Chip 3	Chip 4	Chip 5		
D01U	3	1	1	3	0	3	6	9	12	485 differential signal / TTL single-wire signal	Blue
D12U		12	1	36	0	36	72	108	144		
D16U		16	1	48	0	48	96	144	192		
D01U	4	1	1	4	0	4	8	12	16		
D12U		12	1	48	0	48	96	144	192		
D16U		16	1	64	0	64	128	192	256		

5.2.4 UCS512C0

※ "A* **" means entering "auto addressing" mode, e.g.#1, #2, #3 ..... #999.
"A0 00" means entering "fixed addressing" mode, e.g. #6, #6, #6 ..... #6.

Number of channels in single chip: number of lighting fixture pixel ÷ number of DMX chips × Number of Channels.

The first address of Nth lighting fixture is X*(N-1) where X is the number of channels in each lighting fixture.

Color of LED	Number of Channels	Number of Lighting fixture Pixels	Number of DMX chips in each lighting fixture	Number of channels in single chip	First Add. Of Each Chip					Type of control signal	Color display when addressing successfully
					Chip 1	Chip 2	Chip 3	Chip 4	Chip 5		
UCS512C0	1	1	1	1	0	1	2	3	4	485 differential signal	White
		8	1	8	0	8	16	24	32		
			8	1	0	8	16	24	32		
		12	1	12	0	12	24	36	48		
			12	1	0	12	24	36	48		
		16	1	16	0	16	32	48	64		
			16	1	0	16	32	48	64		
	2	1	1	2	0	2	4	6	8		
		8	1	16	0	16	32	48	64		
			8	2	0	16	32	48	64		
		12	1	24	0	24	48	72	96		
			12	2	0	24	48	72	96		
		16	1	32	0	32	64	96	128		
			16	2	0	32	64	96	128		
	3	1	1	3	0	3	6	9	12		
		8	1	24	0	24	48	72	96		
			8	3	0	24	48	72	96		
		12	1	36	0	36	72	108	144		
			12	3	0	36	72	108	144		
		16	1	48	0	48	96	144	192		
			16	3	0	48	96	144	192		
	4	1	1	4	0	4	8	12	16		
		8	1	32	0	32	64	96	128		
			8	4	0	32	64	96	128		
		12	1	48	0	48	96	144	192		
			12	4	0	48	96	144	192		
		16	1	64	0	64	128	192	256		
			16	4	0	64	128	192	256		

5.2.5 UCS512C4

※ "A* **" means entering "auto addressing" mode, e.g.#1, #2, #3 ..... #999.
"A0 00" means entering "fixed addressing" mode, e.g. #6, #6, #6 ..... #6.

Number of channels in single chip: number of lighting fixture pixel ÷ number of DMX chips × Number of Channels.

The first address of Nth lighting fixture is X*(N-1) where X is the number of channels in each lighting fixture.

Color of LED	Number of Channels	Number of Lighting fixture Pixels	Number of DMX chips in each lighting fixture	Number of channels in single chip	First Add. Of Each Chip					Type of control signal	Color display when addressing successfully
					Chip 1	Chip 2	Chip 3	Chip 4	Chip 5		
UCS512C4	1	1	1	1	0	1	2	3	4	485 differential signal	Red
		8	1	8	0	8	16	24	32		
			8	1	0	8	16	24	32		
		12	1	12	0	12	24	36	48		
			12	1	0	12	24	36	48		
		16	1	16	0	16	32	48	64		
			16	1	0	16	32	48	64		
	2	1	1	2	0	2	4	6	8		
		8	1	16	0	16	32	48	64		
			8	2	0	16	32	48	64		
		12	1	24	0	24	48	72	96		
			12	2	0	24	48	72	96		
		16	1	32	0	32	64	96	128		
			16	2	0	32	64	96	128		
	3	1	1	3	0	3	6	9	12		
		8	1	24	0	24	48	72	96		
			8	3	0	24	48	72	96		
		12	1	36	0	36	72	108	144		
			12	3	0	36	72	108	144		
		16	1	48	0	48	96	144	192		
			16	3	0	48	96	144	192		
	4	1	1	4	0	4	8	12	16		
		8	1	32	0	32	64	96	128		
			8	4	0	32	64	96	128		
		12	1	48	0	48	96	144	192		
			12	4	0	48	96	144	192		
		16	1	64	0	64	128	192	256		
			16	4	0	64	128	192	256		

5.2.6 SM16512

※ "A* **" means entering "auto addressing" mode, e.g. #1, #2, #3……#999.
"A0 00" means entering "fixed addressing" mode, e.g. #6, #6, #6……#6.

Number of channels in single chip: number of lighting fixture pixel ÷ number of DMX chips × Number of Channels.
The first address of Nth lighting fixture is X*(N-1)+1 where X is the number of channels in each lighting fixture.

Color of LED	Number of Channels	Number of Lighting fixture Pixels	Number of DMX chips in each lighting fixture	Number of channels in single chip	First Add. Of Each Chip					Type of control signal	Color display when addressing successfully
					Chip 1	Chip 2	Chip 3	Chip 4	Chip 5		
SM16512	3	1	1	3	1	4	7	10	13	485 differential signal	White
	4	1	1	4	1	5	9	13	17		
SM16511	3	1	1	3	1	4	7	10	13		
	4	1	1	4	1	5	9	13	17		

5.2.7 SW-D

※ Led screen displays “0000”, it means entering “Automatic” addressing mode (e.g. #1, #2, #3……#999).
The first address of Nth lighting fixture is X*(N-1)+1 where X is the number of channels in each lighting fixture.

Color of LED	Number of Channels	Number of Lighting fixture Pixels	Number of DMX chips in each lighting fixture	Number of channels in single chip	First Add. Of Each Chip					Type of control signal	Color display when addressing successfully
					Chip 1	Chip 2	Chip 3	Chip 4	Chip 5		
D01D	3	1	1	3	1	4	7	10	13	485 differential signal / TTL single-wire signal	The first lamp connects with controller will have yellow light, the others are green light.
D06D		6	1	18	1	19	37	55	73		
D08D		8	1	24	1	25	49	73	97		
D12D		12	1	36	1	37	73	109	145		
D16D		16	1	48	1	49	97	145	193		
D01D	4	1	1	4	1	5	9	13	17		
D06D		6	1	24	1	25	49	73	97		
D08D		8	1	32	1	33	65	97	129		
D12D		12	1	48	1	49	97	145	193		
D16D		16	1	64	1	65	129	193	257		

5.3 UNSUCCESSFUL ADDRESSING

5.3.1 UCS512A/UCS512B

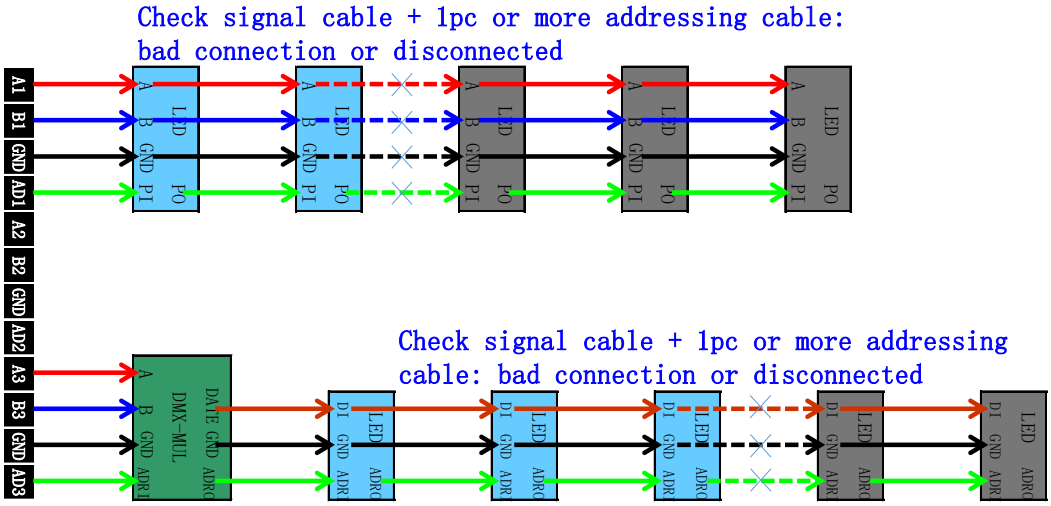

5.3.2 DMX512AP/SM512

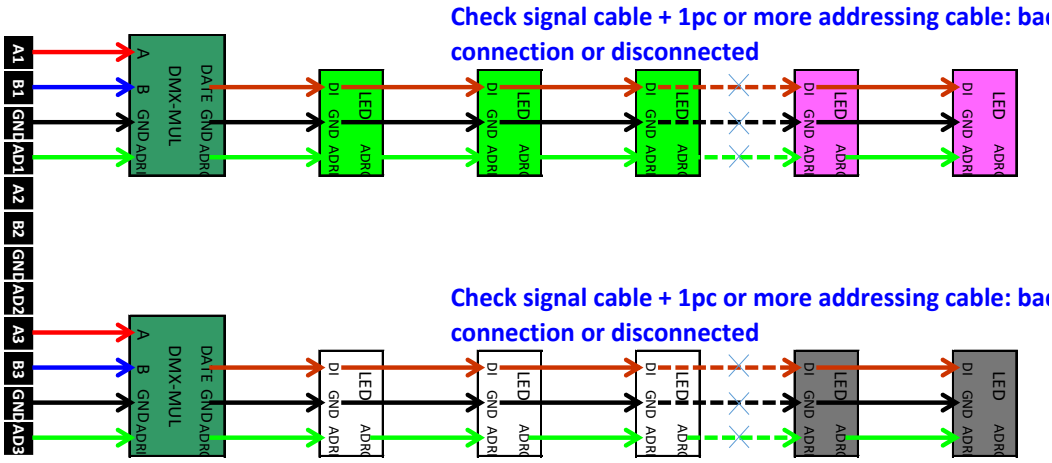

5.3.3 SW-U

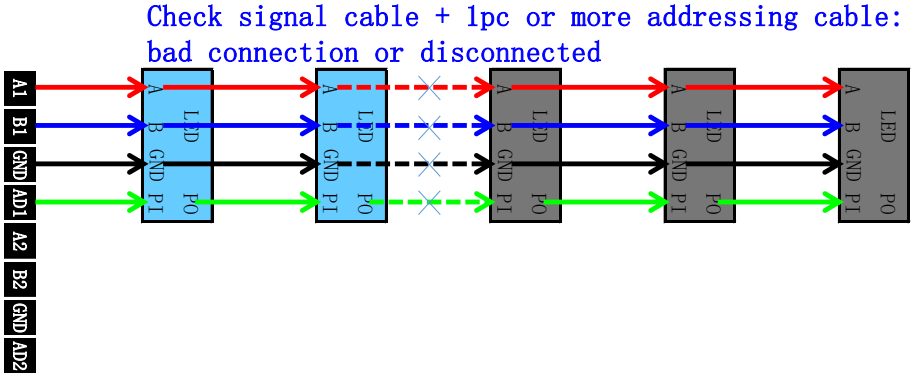

5.3.4 UCS512C

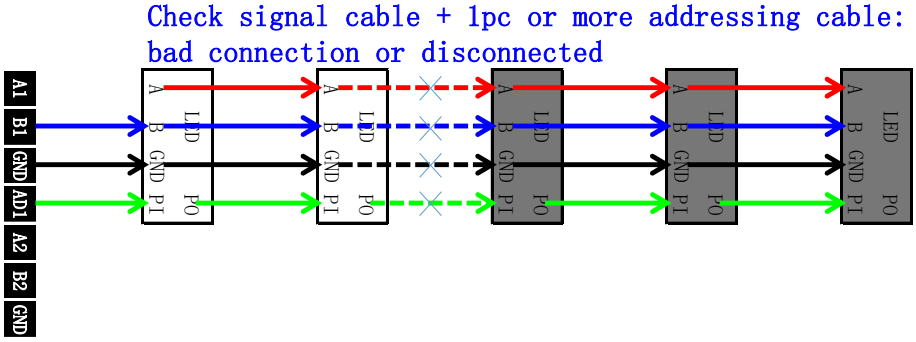

5.3.5 UCS512C4

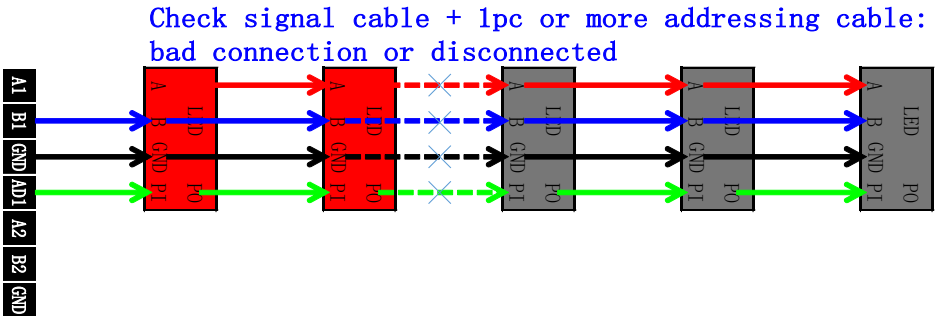

5.3.6 SM16512

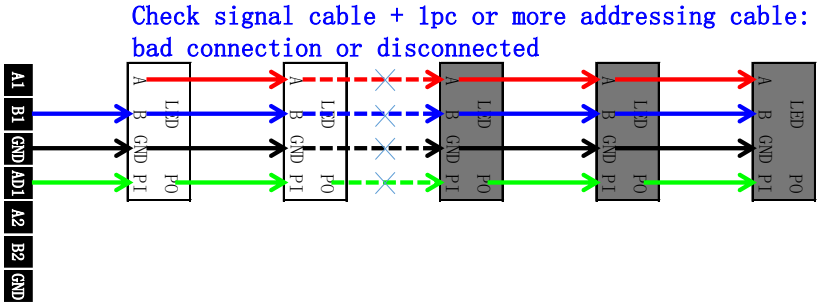

5.3.7 SW-D

When DMX lighting fixture is addressed successfully, the first chip will be yellow light, and it will be green light from the second chip. When the other color occurs, that means the connection between this llighting fixture and previous chip with green light is poor or disconnected.

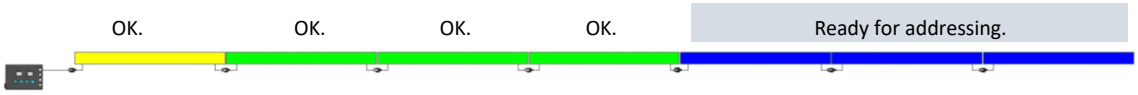

※ Note: If the addressing cable is poor contact or short circuit, it may keep displaying blue color.
Please check corresponding addressing cable when this occurs.

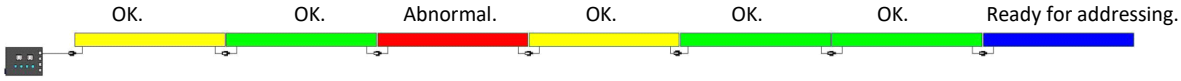

※ When abnormal signal occurs, the next tube will automatically be the first one (yellow light) and renumber accordingly.

※ When the addressing cable is disconnected, the next lighting fixture will automatically be the first one (yellow light) and renumber accordingly.

6. IP ADDRESS SETTING (PC)

1. Open “Network Connection” on the PC, right click “Local Connection” and select “Properties”.

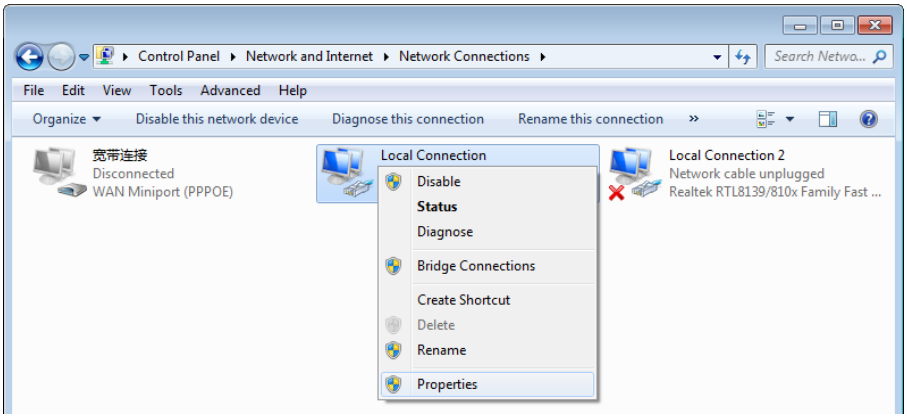

2. Select Internet Protocol (TCP/IP), then click “Properties”. Setting the IP address below.

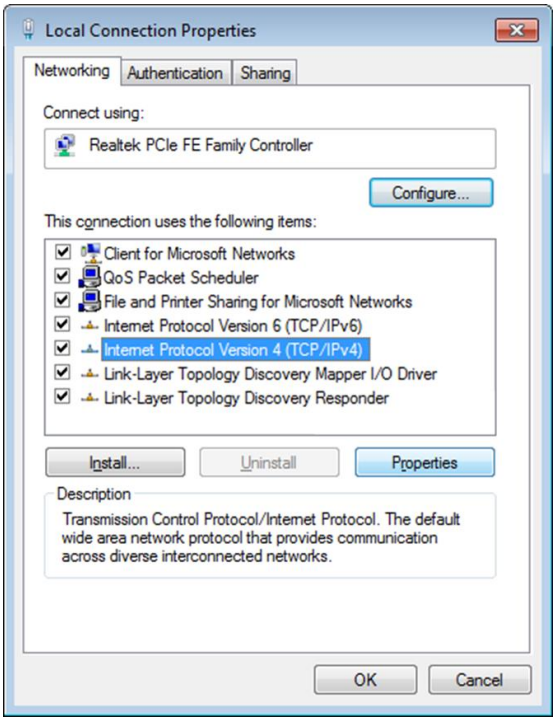

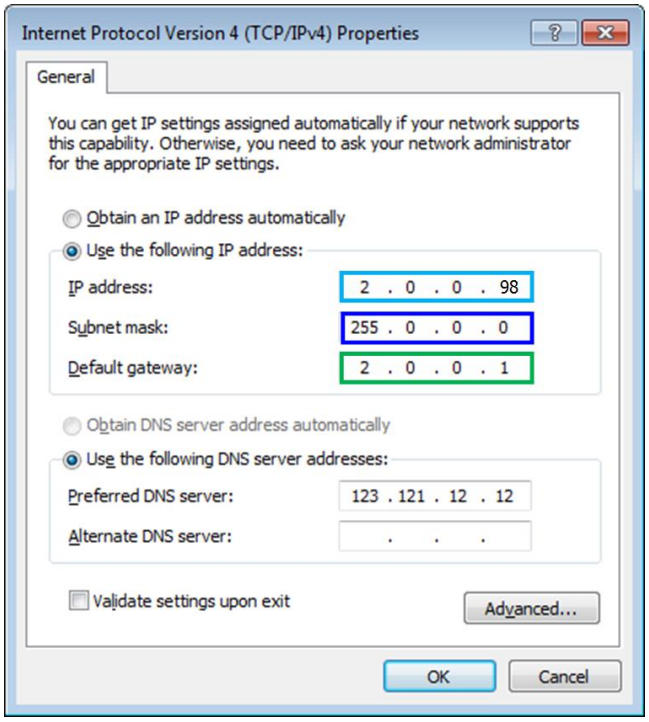

3. Click “OK” after the setting is finished.

7. SETTING THE NIC OF RGBPLAYER

★ The total pixels of RGBPlayer is the pixels of each channel × 8 channels × the quantity of EN-controllers. The quantity is subject to the largest ID.

1. It must be set “Broadcast” like below, if the total pixels of RGBPlayer are under 100,000.

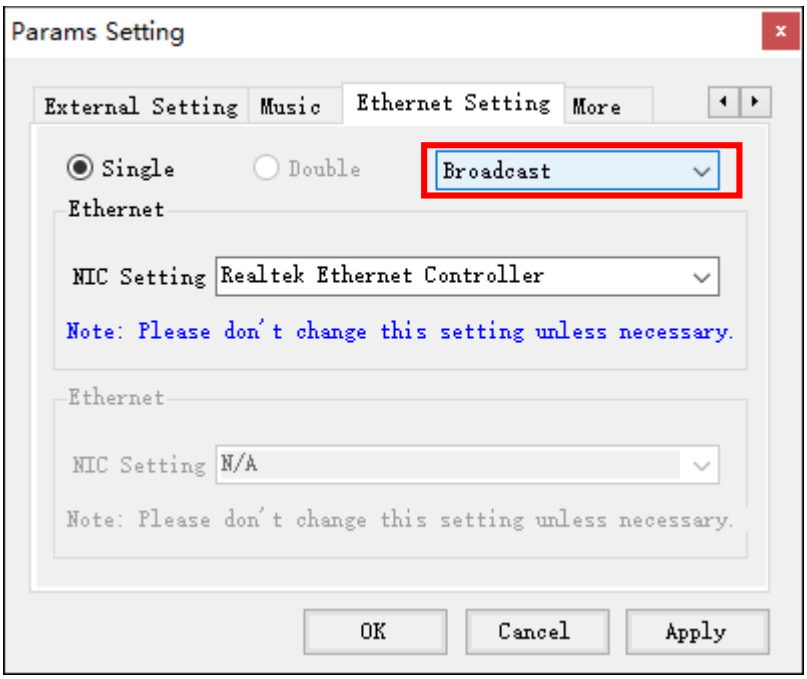

2. It must be set “Unicast” like below, if the total pixels of RGBPlayer are more than 100,000.

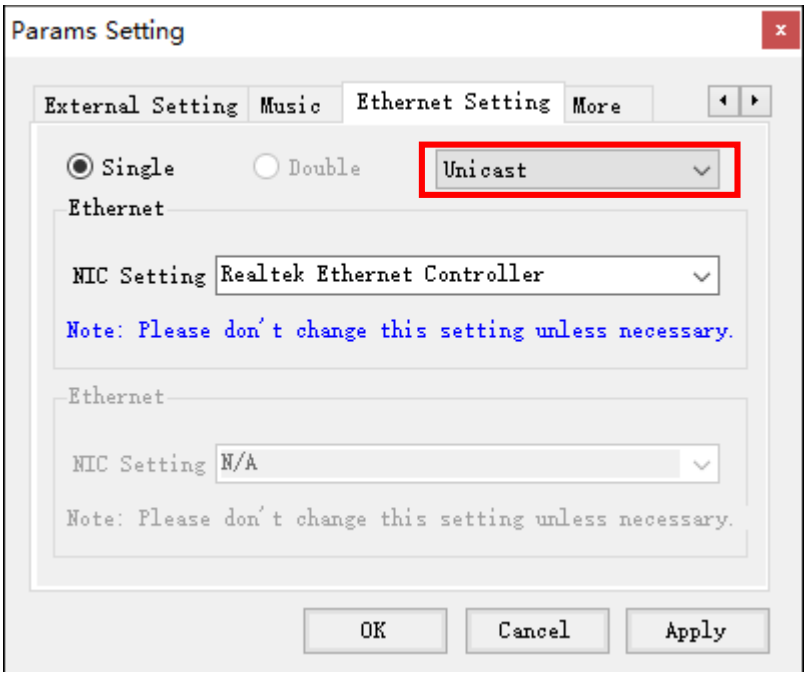

8. CONTROLLER REUSE

we donot sugest you to design the project. As if the error probabilities are raised.

The controllers can copy by ID like below.

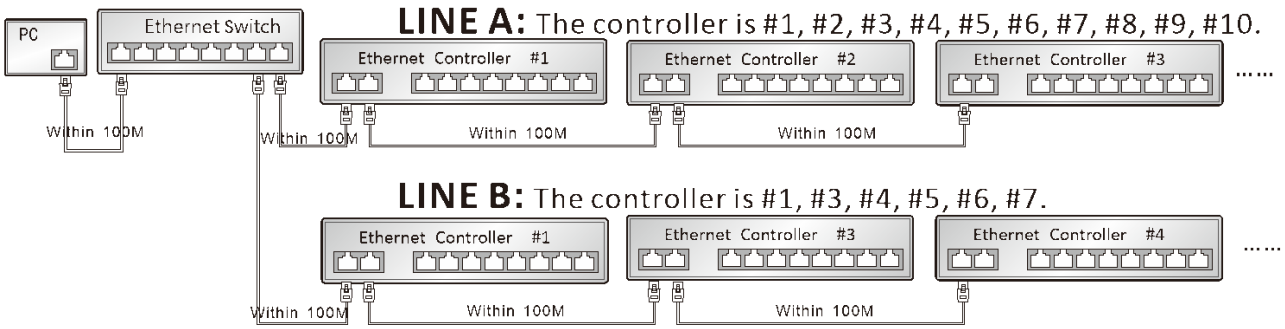

Line A and Line B are connect in parellel.

Some controller in line B are same with some in line A.

There are 10 controllers in line A, and there are 6 controllers in line B.

So, the total pixels of RGBPlayer must be according to line A.

In the meantime, the pixels of RGBPlayer must be under 100.000, and it set “Broadcast” like below.

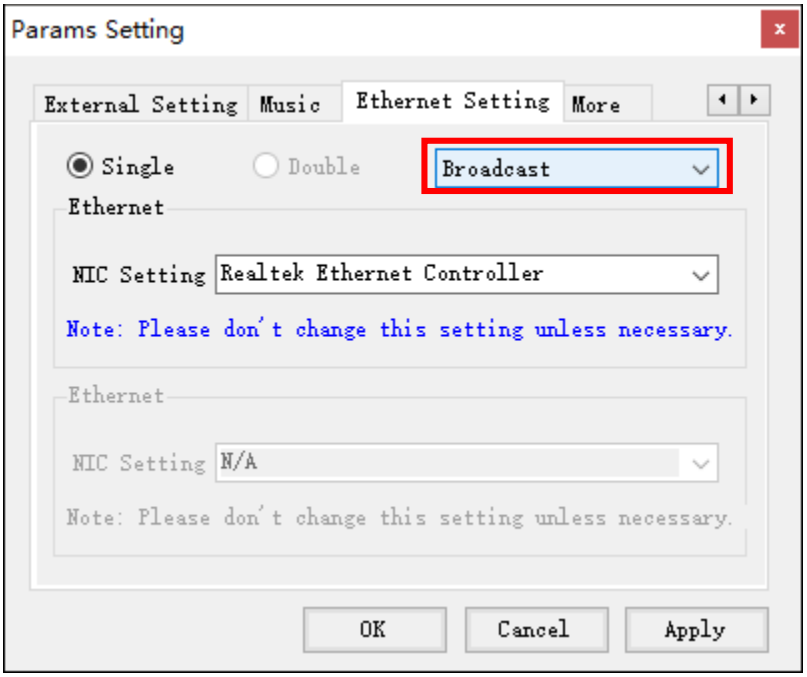

9. UNLOCK PROJECT

When the RGBPlayer shows "System has been locked! Please enter the Nst password to unlock the project!" then the controllers stop working. RGBPlayer can edit effects and set up when close the popup.
Input 8 digits password will open the project for lifetime use. It can be perpetual use after ultimate unlocking.

1. Please contact with us when the RGBPlayer shows "System has been locked! Please enter the Nst password to unlock the project!"

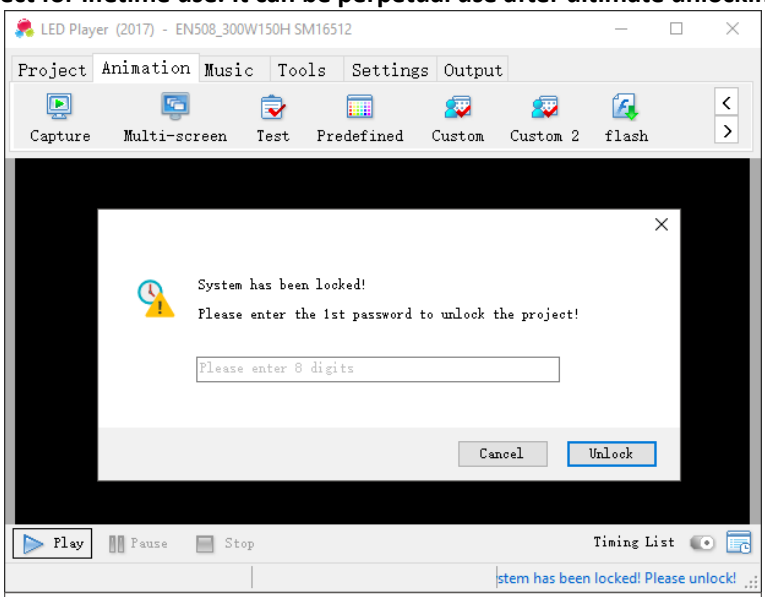

2. It can also open the unlock window in the UNLOCK of the SETTINGS.

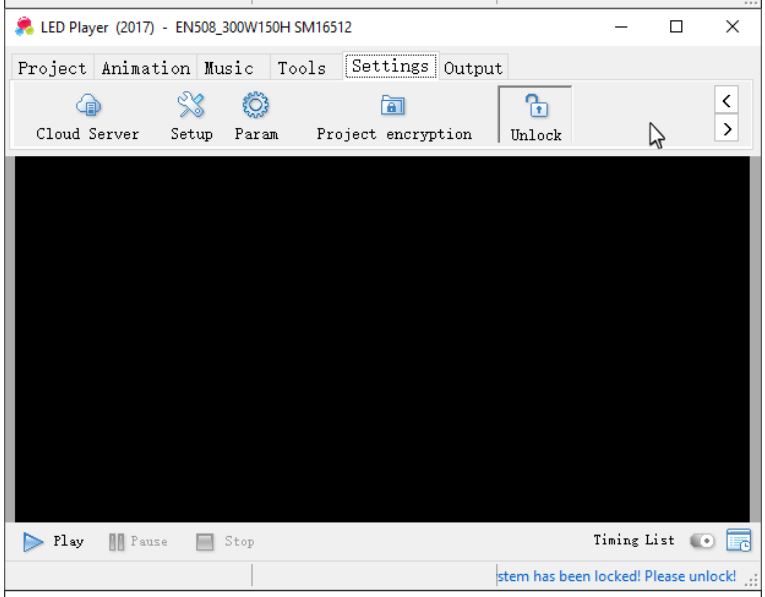

3. The project will unlock whe Input the right 8 digits password. The lifetime shows in the lower right corner of the windows.

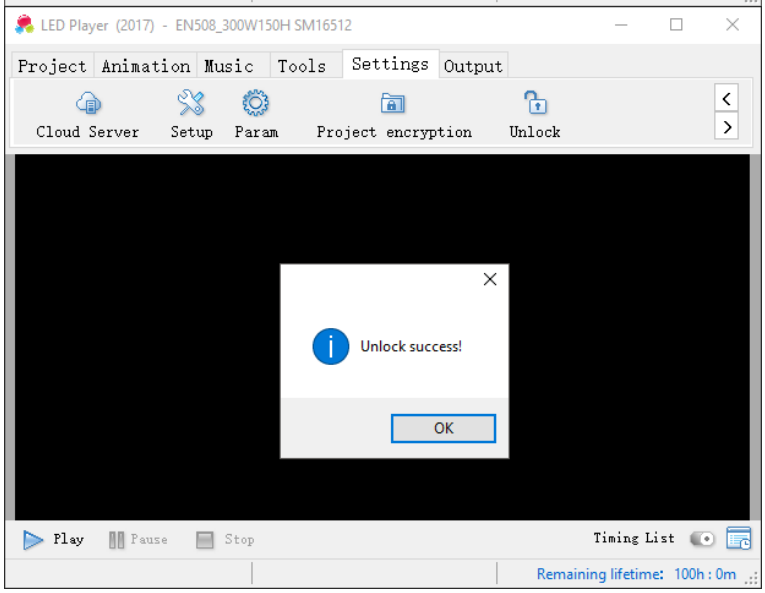

Note: It should be unlocked in sequence, and cannot unlock in advance during a trial.
Final unlocking can be done any time.
It will display “Project has been fully unlocked!” after ultimate unlocking.
The U-KEY can pull out, but the RGBPlayer must be used with the controllers for the same UID.

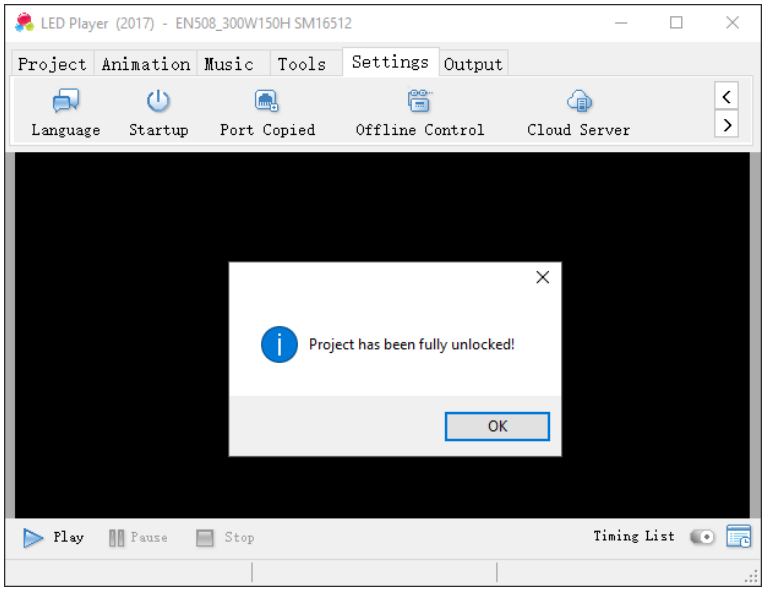

4. The lifetime is automatically improved when the project unlock early.
5. The error belows.

Entering the non-numeric value should cause an error notification.

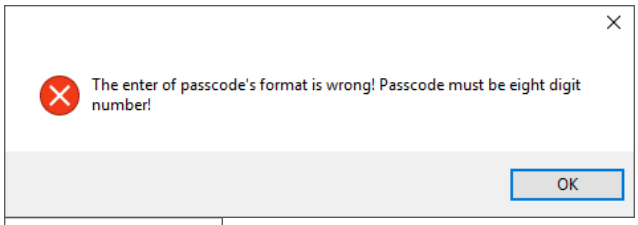

Entering the wrong value should cause an error notification.

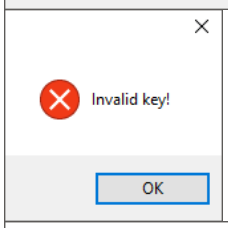

The encrypted RGBPlayer work without U-key.

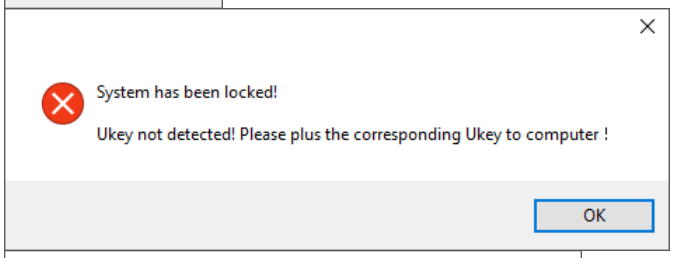

The UID for U-key is diffrent with the project’s.

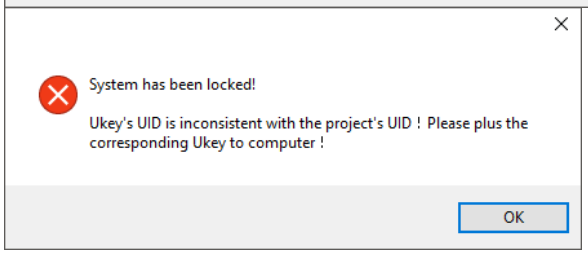

Note:
Right of revising this specification reserved.
(Please understand there will be no extra notice when change is occurred.)
The information in the manual is for reference only,
please don't regard it as guarantee of the product.